BSCS FINAL PROJECT

Mounting and Verification of Voltage Regulator Circuits on Breadboard and Circuit Maker

Advisor: **DR.Irfan**

Presented by:
Roll no:2 and 31

Student Reg#	Student Name
S4F25UBSCS002	M. Afnan Iqbal
S4F25UBSCS031	Sajawal Hameed

Faculty of Information Technology

University of Central Punjab

Design and Testing of voltage Regulator Circuits

By

M.Afnan Iqbal and Sajawal hameed

Project submitted to

Faculty of Information Technology,

University of Central Punjab,

Lahore, Pakistan.

in partial fulfillment of the requirements for the degree of

MASTER/ BACHELOR OF SCIENCE
IN
COMPUTER SCIENCE

Project Advisor

Manager Projects

Project. **Mounting and verification of voltage regulator circuits on breadboard and on circuit maker.**

Apparatus: 12 V peak to peak Step-down Transformer, 4 Diodes (IN 4007), Resistance (1K Ω), Capacitor (1000 µF, 35 V, 16 V), Voltage Regulator (L7805 CV)Light Emitting Diode (LED), Bread Board, Connecting Wires, Digital Multimeter. Circuit maker-multi sim 11.0 software.

Aim and Objective / Goal: The out put voltage should have been regulated up to 4.87 V ~ 5 V DC experimentally and theoretically by circuit maker-multi sim software.

Procedure: The circuit was assembled by constructing a full wave bridge rectifier using four IN4007 diodes, as shown in Figure 1 (a and b). A 12 V peak-to-peak step-down transformer was connected to the rectifier circuit on a breadboard to obtain a pulsating full wave rectified D.C output voltage containing significant ripples.

To reduce these ripples, a 1000 µF, 35 V capacitor was connected across the output terminals of the rectifier circuit. This capacitor acted as a filter and helped in smoothening the D.C output voltage; however, some ripples were still observed on the oscilloscope screen as shown in Figure 2 (b).

For further regulation and to obtain a constant voltage level, a L7805CV voltage regulator IC was connected in parallel with the filtering capacitor. The complete regulated circuit arrangement followed the schematic shown in Figure 1 (a and b). After connecting the regulator, a stable and nearly ripple-free D.C output voltage of approximately 5 V was obtained, as observed on the oscilloscope and measured using a DMM in Figure 2 (d) and Figure 3.

A 1 kΩ resistor was connected in parallel at the output to limit the current and prevent overheating in the circuit. Additionally, an LED was connected at the output as an indicator to verify the presence of regulated D.C voltage. The final output voltage measured was approximately 4.87 V, which confirms the successful operation of the voltage regulated circuit, as also verified through simulation results in Figure 4.

Figure. 1.

(a). Schematic diagram of verification of voltage regulator

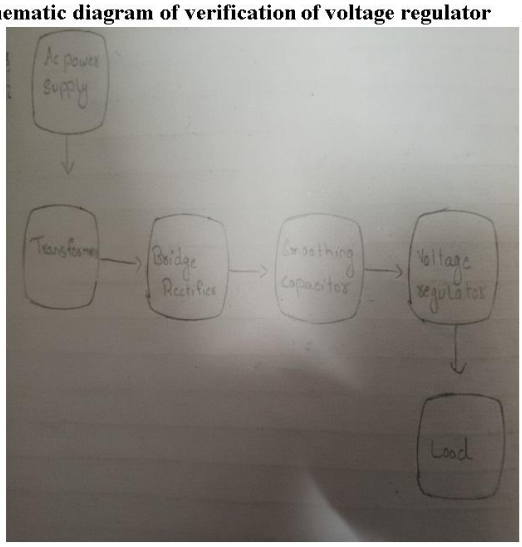

(b). Circuit diagram of verification of voltage regulator

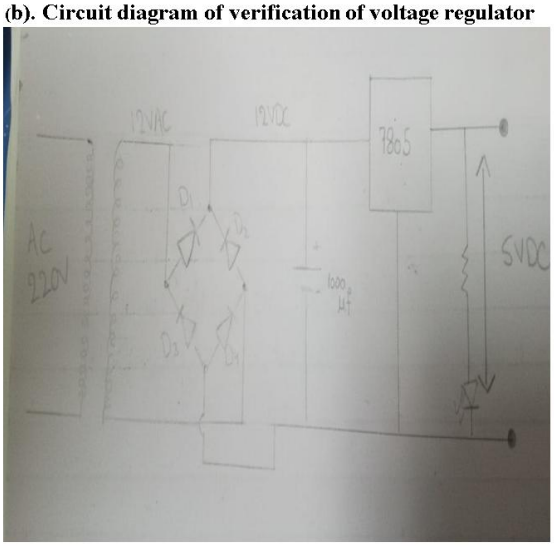

Experimental Results
Figure. 2.

Without Voltage Regulator (a and c) **With Voltage Regulator (b and d)**

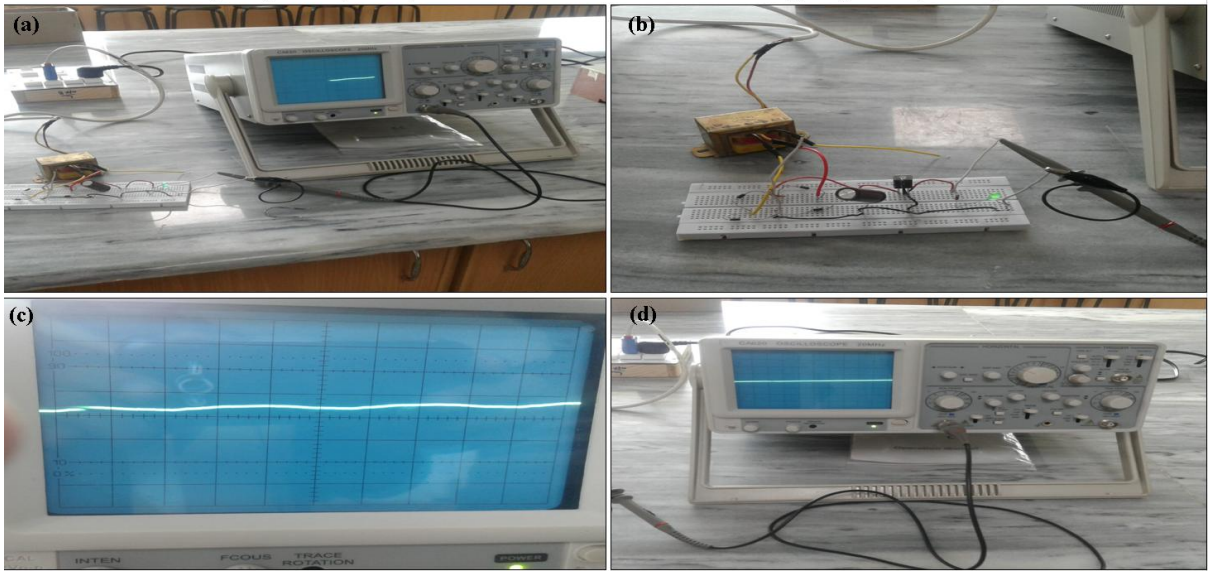

Experimental Circuit Diagram of Output D.C Regulated Voltage
Figure. 3

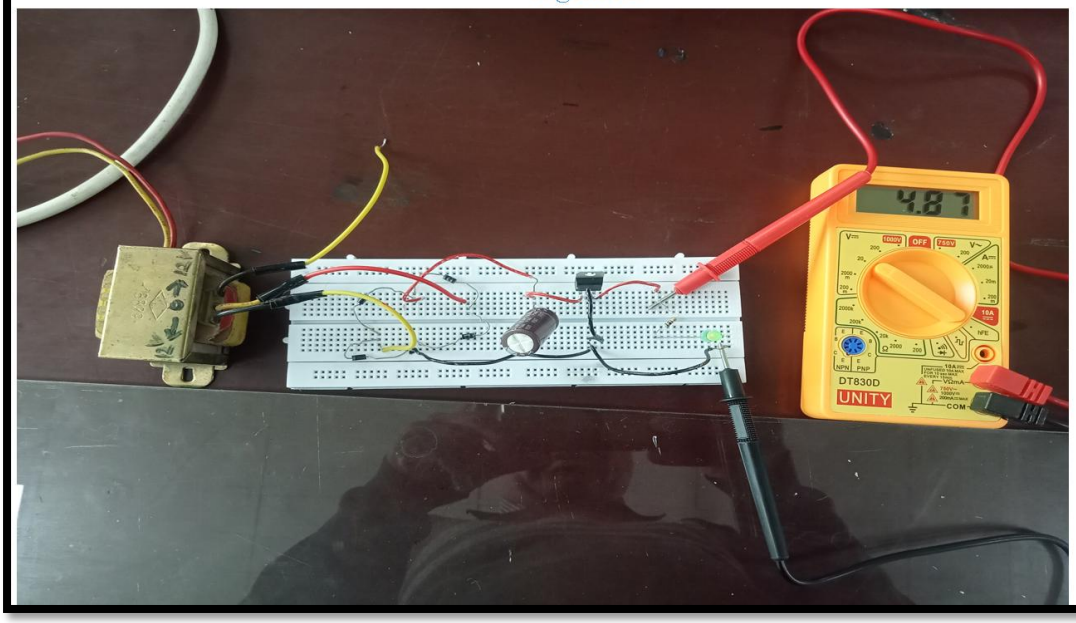

Circuit maker-multi sim circuit diagram of output D.C regulated voltage

Figure. 4

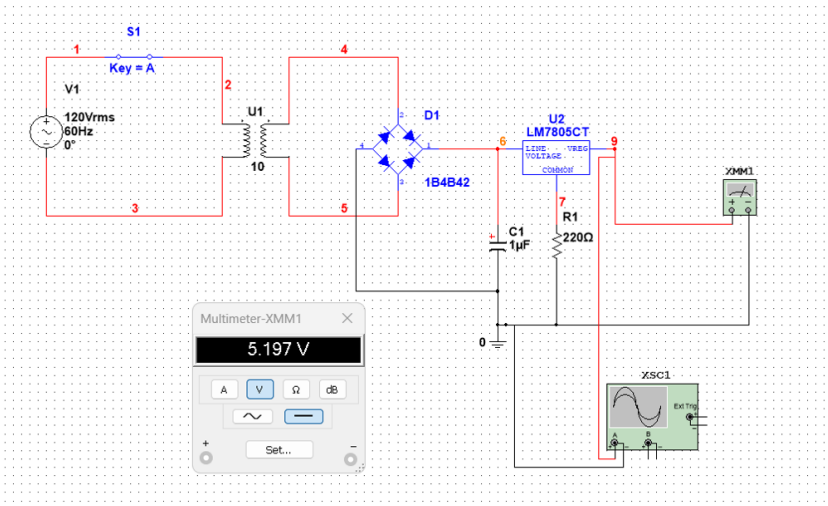

Conclusion :

The out put voltage has been regulated upto 4.87 V ~ 5 V DC both experimentally and theoretically (by circuit maker-multi sim).